REV.	ECN.NO.	MODIFY.CONTENT	DATE
A		NEW	2015/9/29

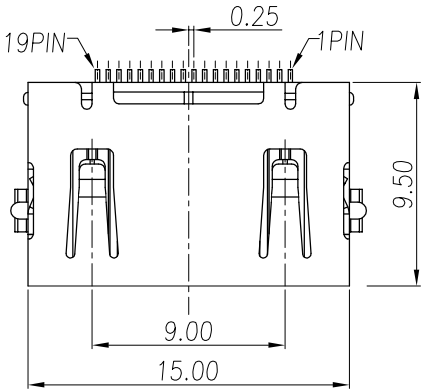

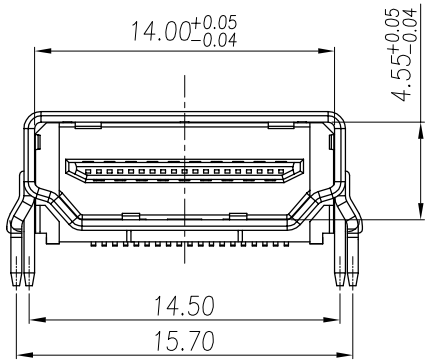

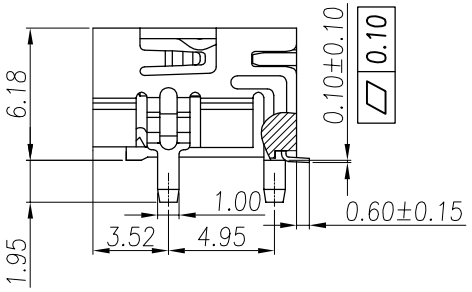

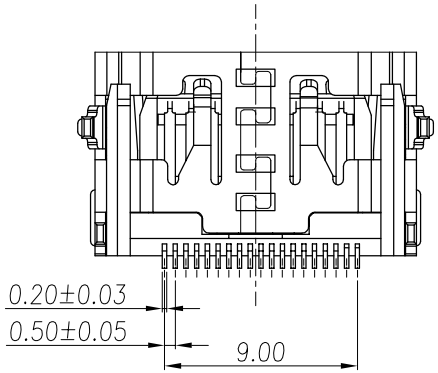

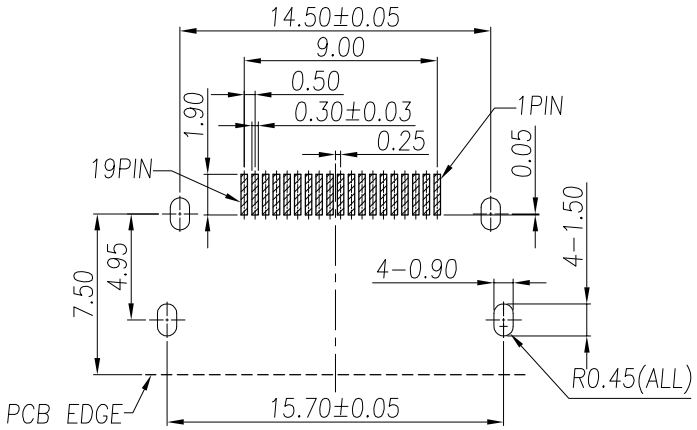

RECOMMENDED PCB LAYOUT (T:1.60mm)

TOLERANCE UNSPECIFIED ±0.10mm

NOTES:

1.) MATERIAL:

1−1. HOUSING:LCP,UL 94V−0,COLOR:BLACK;
1−2. CONTACT:C2680R−EH T=0.20;
1−3. SHELL:C2680 T=0.50;

2−1. CONTACT: Au PLATING ON CONTACT AREA,(SEE P/N DESCRIBING) MATTE PURE Au 1u" Min. PLATING ON SOLDERTAILS,50u" MIN. Ni UNDERPLATING OVERALL;
2−2. SHELL: PLATING Ni

3.) SPECIFICATIONS:

3−1. VOLTAGE RATING: 40V
3−2. CURRENT RATING: 0.5A
3−3. INSULATION RESISTANCE: 100MΩ MIN
3−4. CONTACT RESISTANCE: 30mΩ MAX
3−5. OPERATION TEMPERATURE: −20° TO +85°
3−6. INSERT FORCE:4.0kgf MAX
3−7. EXTRACT FORCE:1.0kgf~4.0kgf
3−8. DURABILITY: 10000 CYCLES

GENERAL TOLERANCE		DWG NO.	JYSA0929−008	APPD:	WIND	Scale	1:1
X.±0.45	x.°±5°	Title	HDMI 19PIN RECEPTACLE SMT TYPE WITHOUT FLANGE	CHKD:		UNIT	mm
.X±0.35	.x°±2°			DR:			
.XX±0.25	.xx°±1°	Part NO.	JYS−HD618−011	Date	2015/09/29		
.XXX±0.15	.xxx°±0.5°		JYSCONN	Shenzhen JYSCONN Electronics Co., LTD.			
SHEET 1/1							